THIS DOCUMENT AND ALL ASSOCIATED DATA HEREIN ARE PROPRIETARY TO OPTI-FORMS, INC. AND CANNOT BE USED OR DISCLOSED IN WHOLE OR IN PART BY ANY PARTY WITHOUT THE EXPRESS WRITTEN CONSENT OF OPTI-FORMS, INC.

NOTES: UNLESS OTHERWISE SPECIFIED

1. ELECTROFORM REFLECTOR FROM MASTER TOOL WITH SPECULAR SURFACE QUALITY OF 80-50 SCRATCH-DIG PER MIL-PRF-13830B.
2. NOMINAL THICKNESS (T) MAY VARY ± T/4 WITHIN .25 OF EDGES.
3. REFLECTIVE SURFACE COATING TO BE SEPARATELY SPECIFIED.
4. NECK APPLIES TO -0300 CONFIGURATION ONLY.

REVISIONS			
REV	DESCRIPTION	DATE	APPROVED
Ø	INITIAL DRAWING RELEASE	05/31/96	GFW
A	ADDED -3 AND NOTE 7	08/26/97	KMT
B	REVISED TOLERANCES	02/05/98	KEN S
C	REVISED TOLERANCES	06/30/98	KEN S
D	CORRECTED GEOMETRY DATA	03/17/00	GFW
E	REMOVES FLANGE HOLES	06/28/00	GFW
F	UPDATED DRAWING FORMAT	08/23/17	RRS

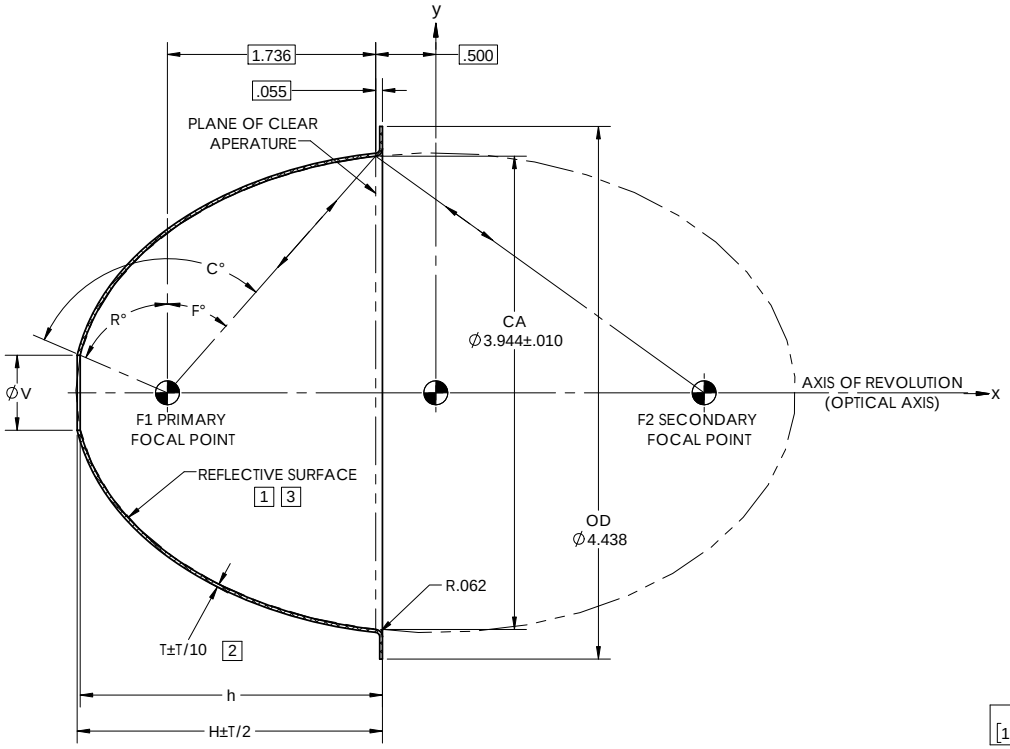

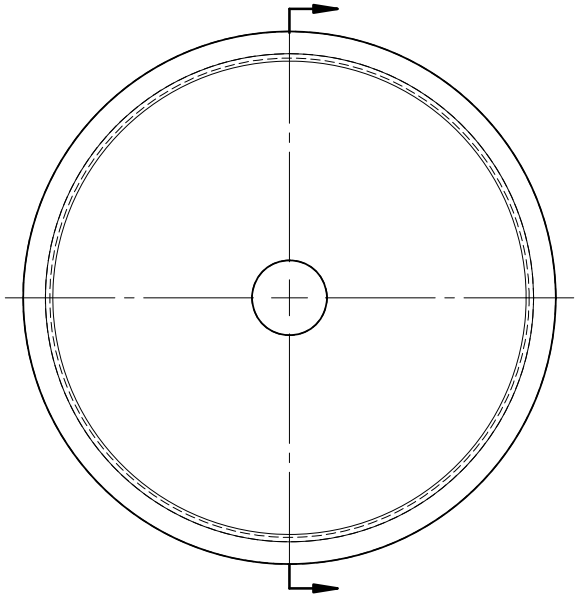

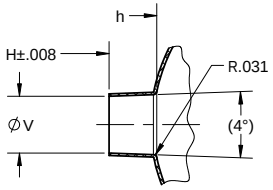

4 -3 ONLY

ELLIPTICAL GEOMETRY DATA

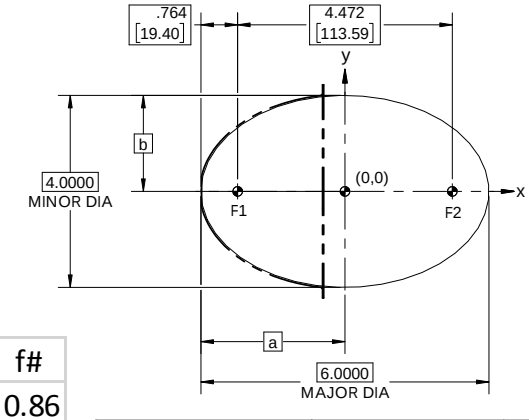

ELLIPSE EQN.

$$\frac{x^2}{a^2} + \frac{y^2}{b^2} = 1$$

a =3.0000
b =2.0000

DASH NO.	V	T	H	h	R°	F°	C°	f#
E114	0.625	0.025	2.543	2.518	66.74	41.36	108.10	0.86
E114-0100	0.625	0.025	2.544	2.518	66.74	41.36	108.10	0.86
E114-0200	1.000	0.025	2.487	2.460	53.21	41.36	94.57	0.86
4 E114-0300	0.473	0.025	2.925	2.532	71.34	41.36	112.70	0.86

NOTE: THE "E114" DASH NO. IS THE THEORETICALLY LARGEST REFLECTOR THAT CAN BE FORMED FROM EXISTING MASTER TOOLING.

NEXT ASSY | USED ON
APPLICATION

UNLESS OTHERWISE SPECIFIED
DIMENSIONS ARE IN INCHES [mm]
GD&T PER ASME Y14.5-2009
DO NOT SCALE DRAWING
TOLERANCES
FRACTIONS ± 1/16 | DECIMALS .XX ± .02 .XXX ± .005 | ANGLES ± 1/2°
SURFACE ROUGHNESS 63
DEBURR SHARP EDGES & HOLE RIMS .015 MAX. CHAMFER THREADS .01 PAST ROOT DIAMETER
THIRD ANGLE PROJECTION

CONTRACT NO. 00-E114
DRAWN JIW DATE 08/23/17
CHECKED DATE
ENGR RRS DATE 08/23/17
MATERIAL ELECTROFORMED NICKEL - LSSN TYPE 1
FINISH SEE NOTE 3

optiforms
42310 WINCHESTER RD.
TEMECULA, CA 92590
WWW.OPTIFORMS.COM

REFLECTOR, ELLIPTICAL
4.47"/114mm (F1-F2)

SIZE C | CAGE CODE 0Y1Y4 | DWG. NO. E114 | REV F
SCALE 5:4 | WT. (REF) | CAD NO. E114 | SHEET 1 OF 1